SOLAX POWER | BVB 09 PARTNER

X1-IES

2.5kW – 8kW

Integrated Energy Storage System

Single Phase

Global: +86 571-56260008

www.solaxpower.com
info@solaxpower.com

Shanghai Stock Exchange
Stock Code: 688717

INTRODUCTION

This is an integrated residential ESS which comes with a 3-8kW hybrid single-phase inverter and extensible battery modules, plug and play, capacity range from 5 to 20 kWh. It has excellent performance in economy, safety and robustness. In addition, intelligent functions like VPP, micro-grid, smart schedule and smart scene are all ready. It would be the best choice for householders.

SolaX IES

Features

Economic

- All in one design, plug and play, expandable and installation easily
- Maximum 200% oversize and 200% PV input power
- Maximum 20A DC single string input current, support high power solar panel
- Low start output voltage makes inverter longer working time
- Built-in shadow tracking function
- Maximum Charge / Discharge Current up to 50A

Safe

- IP66 protection level
- AC&DC SPD type II, always guarding the inverter
- AFCI optional

Robust

- Robust back-up ability, switchover time <10ms(UPS level), up to 200% EPS output for 10s
- Battery heating technology, -30°C extreme environment operation

Intelligent

- AI ready, forecasting solar generation and home consumption, smart energy management strategy
- VPP ready, SolaX cloud support resource aggregator(IEEE 2030.5, OpenADR)
- Micro-grid ready, supporting real-time power balance between PCS and Hybrid in grid-connected and off-grid scenarios.
- Support smart scene function, intelligent loads management (e.g., Heat pump, EV charger)
- Support 7×24h scheduling mode
- Support Wireless meter solution

SYSTEM OVERVIEW

System schematic

Rated output power [kW]	2.5 / 3 / 3.7 / 4.6 / 5 / 6 / 8			
Number of batteries	1	2	3	4
Nominal capacity [kWh]①	5.1	10.2	15.3	20.4
Usable energy [kWh]②	4.6	9.2	13.8	18.4
Max. charge/discharge power [kW]③	5.1	8	8	8
Degree of protection	IP66			
Operating temperature range [°C]	-30 to 53			
Allowable relative humidity range [%]	5-95 (No condensation)			
Max. operating altitude [m]	3000			
Net weight [kg]④	87.2	134.2	181.2	134.2 / 99.2
Dimension (W x H x D) [mm]	730 x 908 x 210	730 x 1226 x 210	730 x 1544 x 210	730 x 1226 x 210 / 730 x 809 x 150
Display	LCD			
Cooling concept	Natural cooling			
Topology	Non-isolated			
Communication	RS485, Pocket-X, USB, CAN, DO, DI			

① Test conditions: 25°C, 100% depth of discharge (DoD), 0.2C charge & discharge.
② System usable energy may vary with inverter different setting.
③ The max.charge/discharge power must not exceed the rated output power (the table takes the maximum power inverter as an example).
④ Different inverter models have different weights. The heaviest one is taken as an example.

*Manufactured in China

SPECIFICATIONS

	X1-IES-2.5K	X1-IES-3K	X1-IES-3.7K	X1-IES-4.6K	X1-IES-5K	X1-IES-6K	X1-IES-8K
INPUT PV							
Max. recommended PV array power [Wp]	5000	6000	7400	9200	10000	12000	16000
Max. DC voltage [V]	600						
Nominal DC operating voltage [V]	360						
Max. input current (input PV1 / input PV2 / input PV3) [A]	PV1: 20 / PV2: 20			PV1: 20 / PV2: 20 / PV3: 20			
Max. short circuit current (input PV1 / input PV2 / input PV3) [A]	PV1: 30 / PV2: 30			PV1: 30 / PV2: 30 / PV3: 30			
MPPT voltage range① [V]	40 to 560						
Min. operating voltage [V]	40						
Start output voltage [V]	50						
No. of MPP trackers / Strings per MPP tracker	2 / (1 / 1)	2 / (1 / 1)	2 / (1 / 1)	3 / (1 / 1 / 1)	3 / (1 / 1 / 1)	3 / (1 / 1 / 1)	3 / (1 / 1 / 1)
INPUT AC							
Nominal AC power [VA]	6300	6300	7360	9200	9200	9200	9200
Max. AC current [A]	27.4	27.4	32	40.0	40.0	40.0	40.0
Rated grid frequency [Hz]	50 / 60						
Power factor	~1 (Adjustable from 0.8 leading to 0.8 lagging)						
OUTPUT AC (On-Grid)							
Nominal AC power [VA]	2500	3000	3680	4600	5000 (4600 for VDE4105, 4999 for AS4777)	6000	8000
Max. apparent AC power [VA]	2500	3300	3680	4600	5000 (4600 for VDE4105, 4999 for AS4777, 5000 for C10/11)	6600	8000
Rated grid voltage(AC voltage range) [V]	Single phase, 220 / 230 / 240						
Rated grid frequency [Hz]	50 / 60						
Rated AC output current [A] (at 230V, 50Hz)	10.9	13.1	16	20	21.8	26.1	34.8
Max. AC current [A] (at 230V, 50Hz)	10.9	14.4	16	20	21.8	28.7	34.8
Displacement power factor	~1 (Adjustable from 0.8 leading to 0.8 lagging)						
Total harmonic distortion (THDi, rated power) [%]	< 3						

	X1-IES-2.5K	X1-IES-3K	X1-IES-3.7K	X1-IES-4.6K	X1-IES-5K	X1-IES-6K	X1-IES-8K
EPS OUTPUT (With battery)							
EPS peak power [VA]	≤1.1Pn continuous operation; 1.1Pn-2Pn 10s; >2Pn report error immediately						
EPS rated power [VA]	2500	3000	3680	4600	5000	6000	8000
EPS rated voltage [V]; frequency [Hz]	Single phase, 220 / 230 / 240; 50/60						
EPS rated current [A]	10.9	13.1	16	20	21.8	26.1	34.8
Switchover time [ms]	< 10						
Total harmonic distortion (THDv, linear Load) [%]	< 3						
BATTERY							
Battery voltage range [V]	80 ~ 480						
Communication interfaces	CAN / RS485						
BMS module	TBMS-MCS0800E						
Battery module	TP-HS50E						
Composition	TBMS-MCS0800E + TP-HS50E * n + Base Dimensions + Series Box (Required for two columns)						
Battery type	Li-ion (LFP)						
Nominal capacity [kWh] / Nominal capacity [Ah]②	5.1 / 50						
Usable energy [kWh]③	4.6						
Standard power [kW]	3						
Max power [kW]	5.1						
Max. charge / discharge current [A]④	50						
Cycle life [Cycles]	> 6000						
Warranty [Years]	10						
Safety	CE, RCM, TUV (IEC62619), RoHS, REACH						
TBMS-MCS0800E dimensions(W × H × D) [mm] / Weight [kg]	730 × 165 × 150 / 9.3						
TP-HS50E dimensions(W × H × D) [mm] / Weight [kg]	730 × 318 × 150 / 47						
Base dimensions(W × H × D) [mm] / Weight [kg]	730 × 75 × 150 / 3.9						
Series box dimensions(W × H × D) [mm] / Weight [kg]	167 × 91.5 × 121 / 1.3						
EFFICIENCY							
Max. efficiency [%] / Euro-efficiency [%]	97.6 / 97.0						
Rated battery charge [%] / Discharge efficiency [%]	98.5 / 97						
GENERAL DATA (INVERTER)							
Dimensions (W × H × D) [mm]	717 x 350 x 210						
Weight [kg]	26.2			26.4			27
Operating temperature range [°C]	− 35 to 60 (derating at 45°C)						
Relative humidity [%]	0 to 100 (condensing)						
Storage temperature [°C]	-40 to 65						
Noise emission (typical) [dB(A)]	< 35						
Internal consumption (night) [W]	< 40W for hot standby, < 5W for cold standby						
PROTECTION							
Protective Class	Class Ⅰ						
Over voltage Category Mains	OVC Ⅲ						
Over voltage Category PV	OVC Ⅱ						
Over voltage Category Battery	OVC Ⅱ						
Active anti-Islanding protection	Yes, Frequency shift						
Anti-Islanding protection	Yes						
DC reverse polarity protection	Yes						
Insulation monitoring	Yes						
Residual current monitoring	Yes						
AC overcurrent protection	Yes						
AC short-circuit protection	Yes						
AC overvoltage protection	Yes						
Over-heat protection	Yes						
AFCI	OPT						
Surge protection	Type Ⅱ, DC and AC						
STANDARD							
Safety	IEC62109-1 / IEC62109-2						
EMC	EN 61000-6-1 / EN 61000-6-2 / EN 61000-6-3						
Certification	VDE 0126-1-1 A1:2012 / VDE-AR-N 4105 /G98/G99/ AS4777 / EN50549 / CEI 0-21						

① Any DC input voltage beyond the MPPT voltage range may result in inverter improper operating. ② Test conditions: 25°C, 100% depth of discharge (DoD), 0.2C charge & discharge.
③ System usable energy may vary with inverter different setting.④ Discharge: In case of battery cell's temperature range of -20°C~10°Cand 45°C~53 °C,the discharge current will be reduced; Charge: In case of battery cell's temperature range of 0°C~25°C and 45°C~53°C, the charge current will be reduced. Product charge or discharge power depends on the actual temperature of battery pack.

TACTICAL SCENARIO

PARTIAL SOLUTION

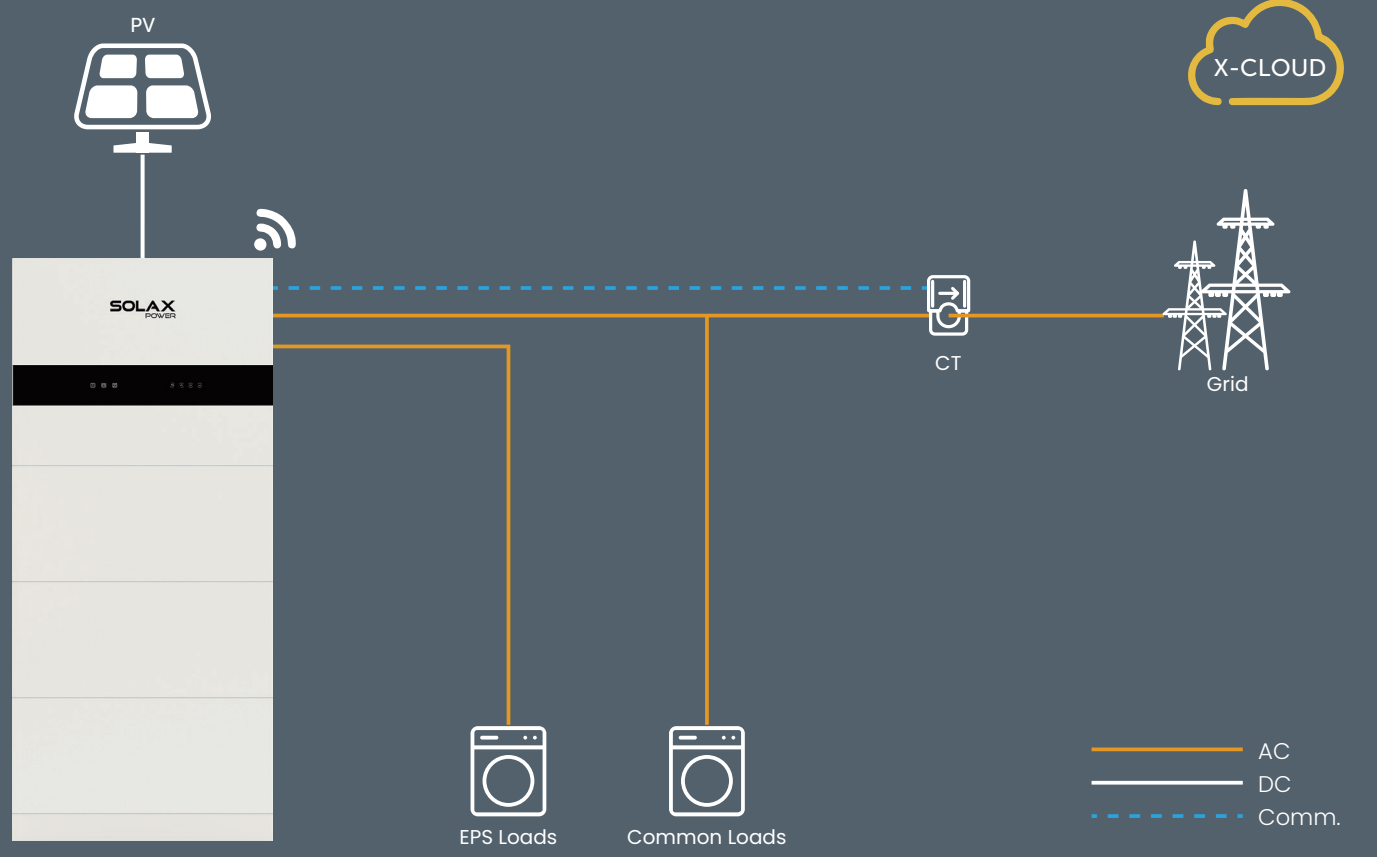

WHOLE HOME BACKUP SOLUTION

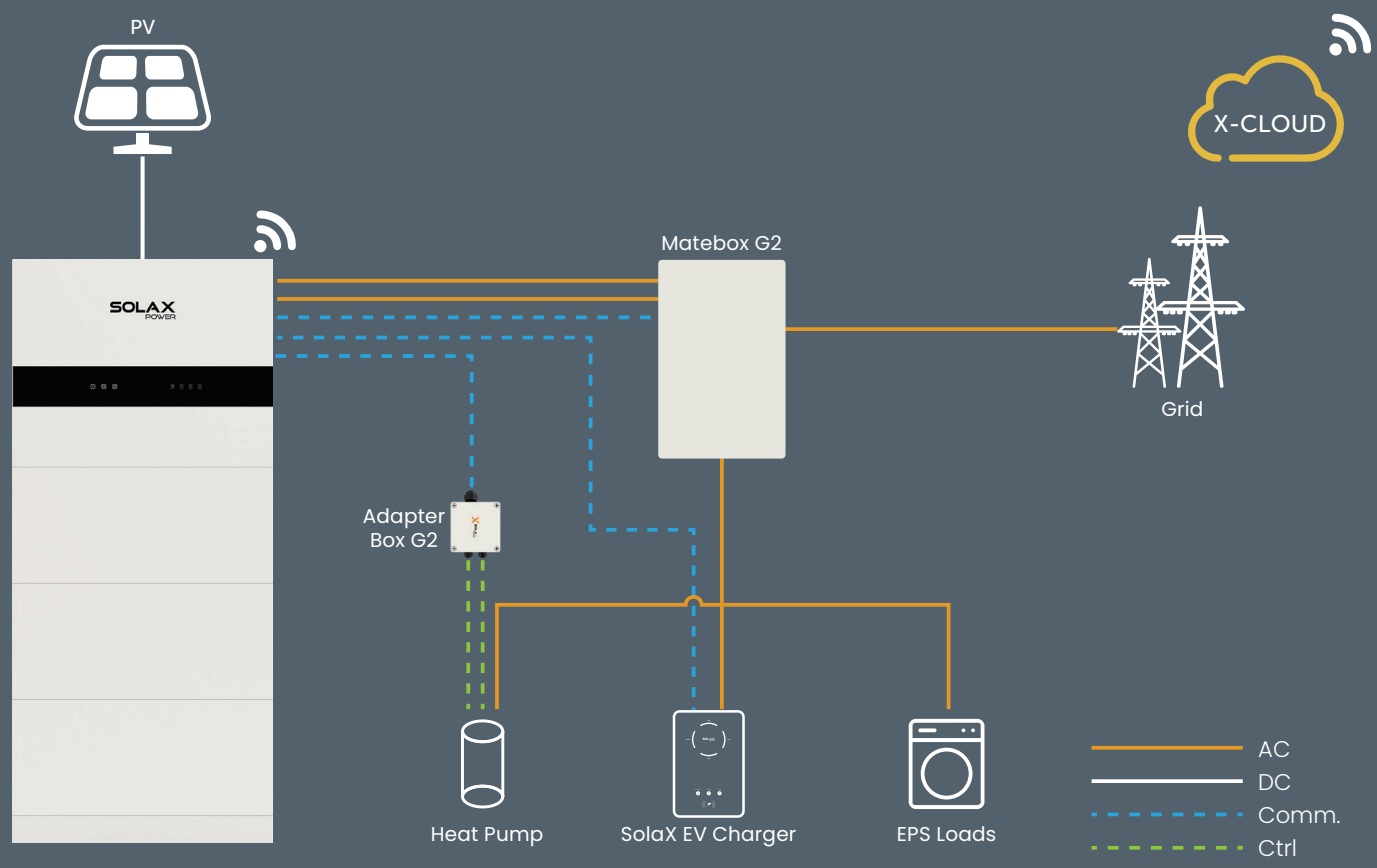

PARALLEL & GENERATOR INTEGRATED SOLUTION

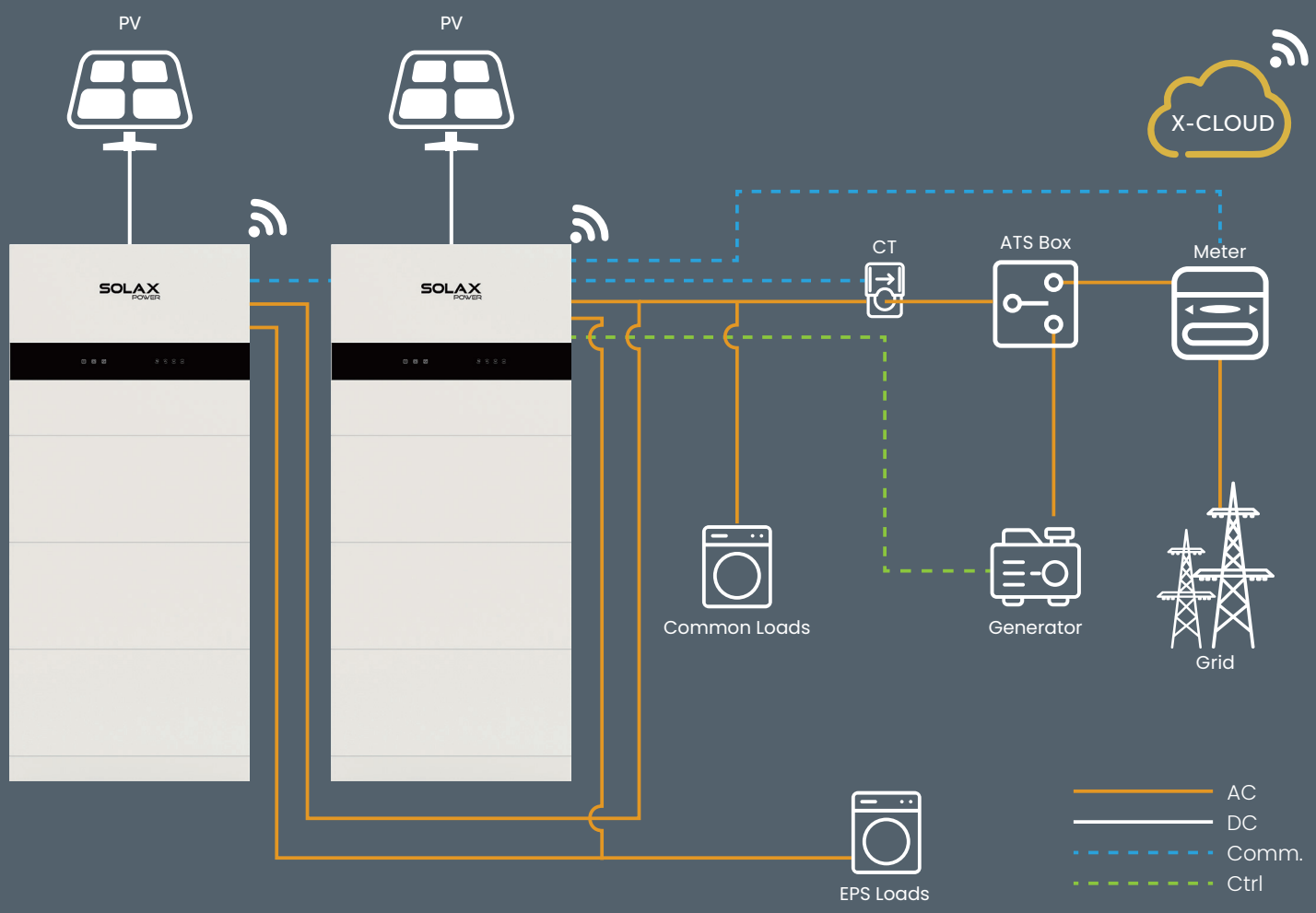

Note: The inverter has not been tested to AS/NZS 4777.2:2020 for multiple inverter combinations and/or multiple phase inverter combinations such combinations should be used or external devices should be used in accordance with the requirements of AS/NZS 4777.1.

Derating Curve (8kw)

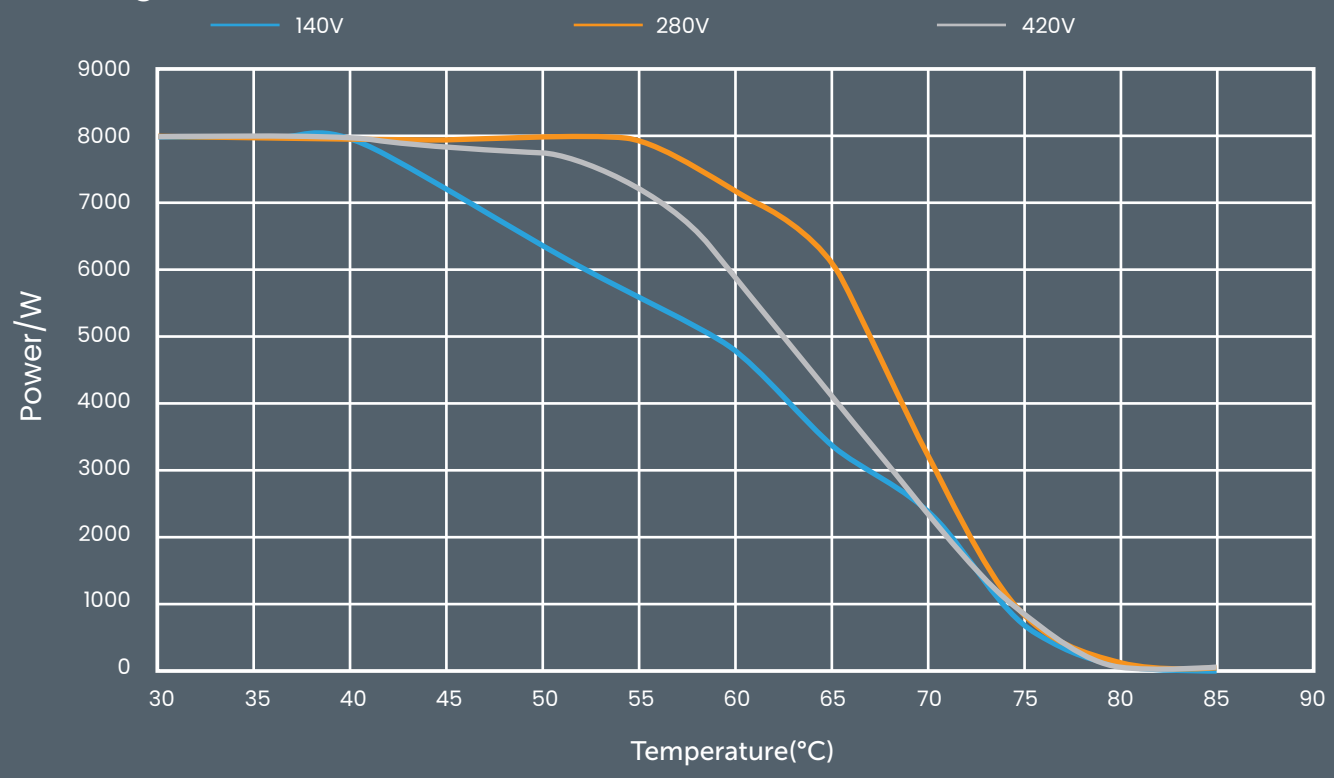

EFFICIENCY CURVE

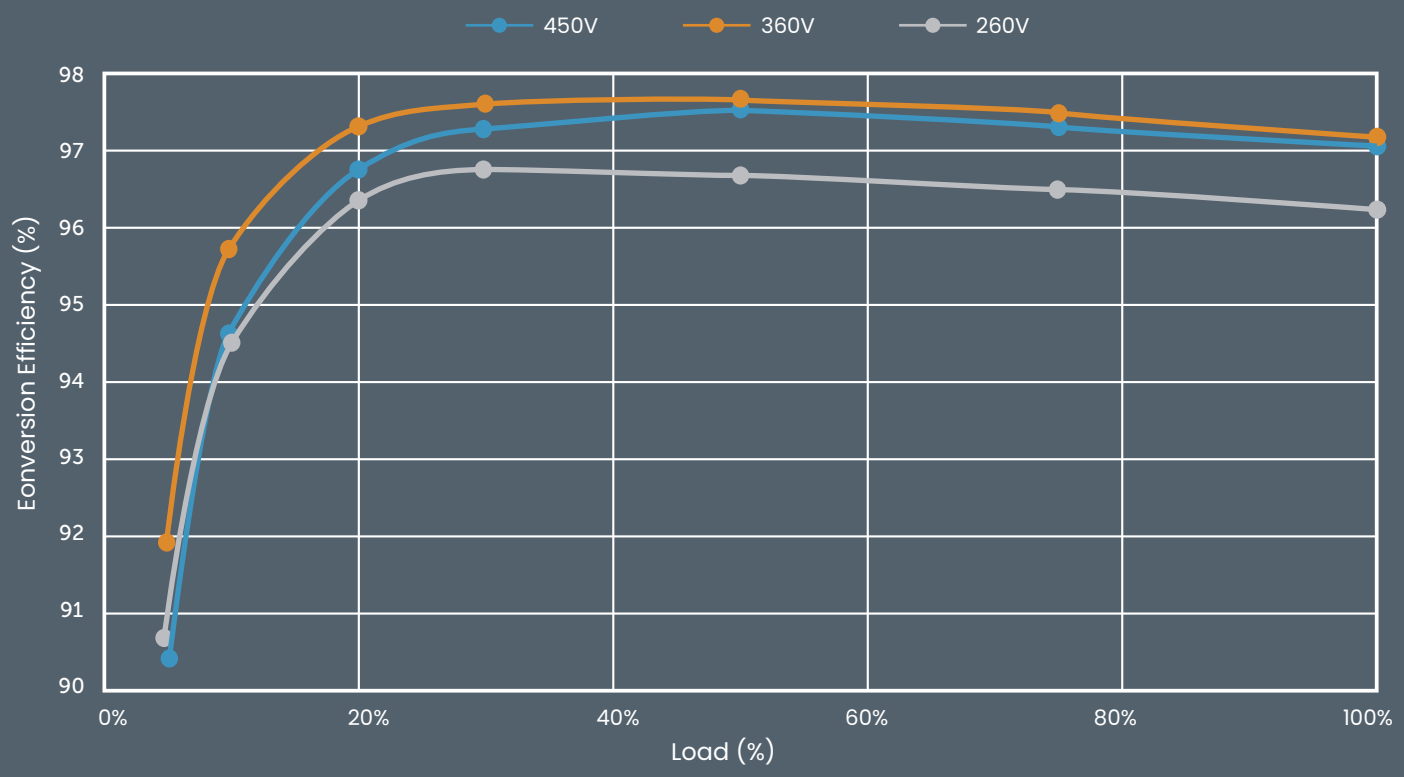

CIRCUIT DIAGRAM

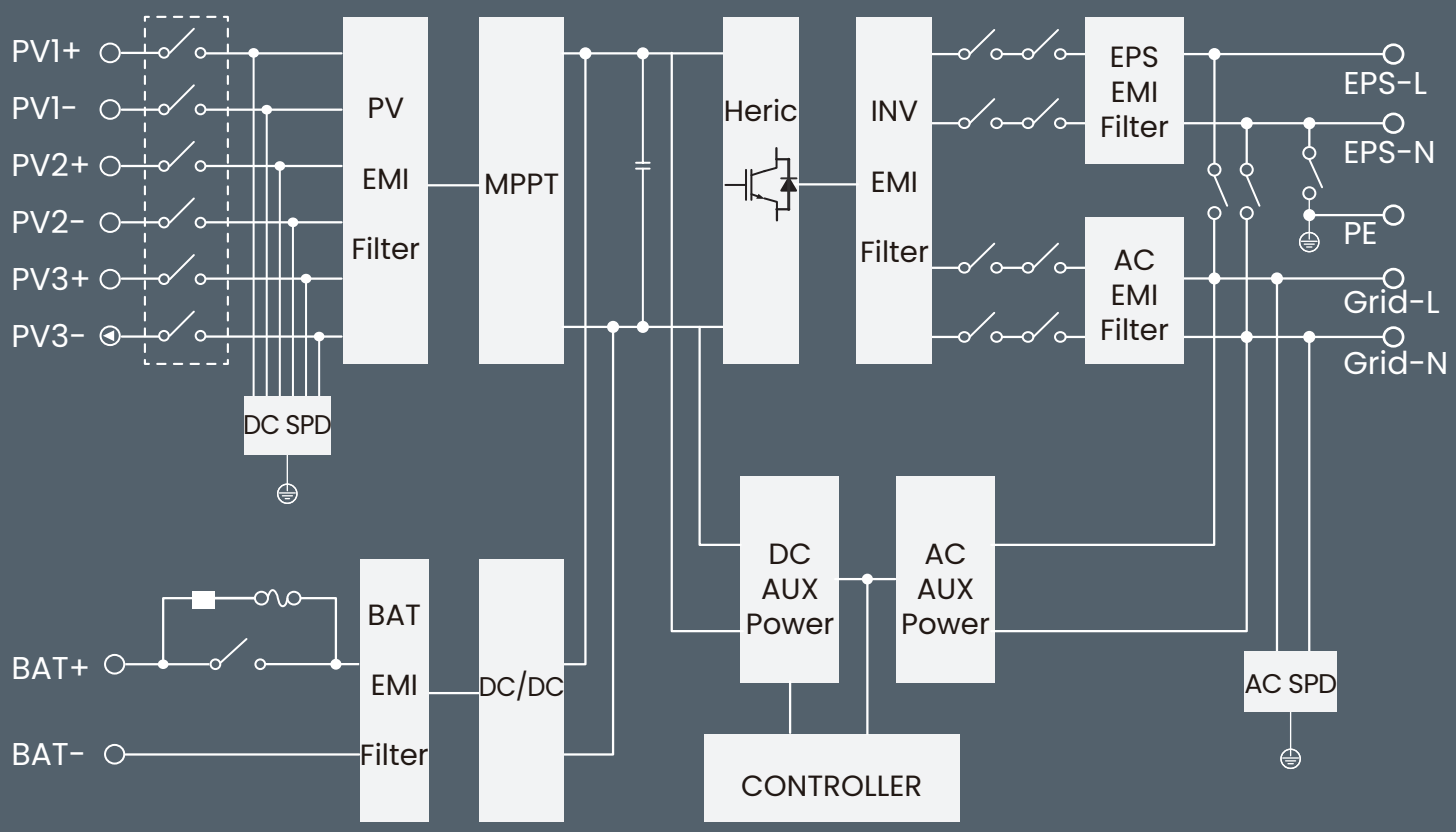

POWERING A GREEN FUTURE

www.solaxpower.com

Global: +86 571-56260008
PL: +48 662 430 292

AU: +61 1300 476 529
DE: +49 (0) 6142 4091 664

UK: +44 2476 586998
NED:+31 (0) 8527 37932

info@solaxpower.com
service@solaxpower.com

V1.5. Information may be subject to modify without notice.
650.00040.00